A thin wall high vacuum compact chamber for nuclear reaction studies

Suresh Kumar*, V.M. Datar, D.R. Chakrabarty, P.C. Rout, R. Kujur,
Nuclear Physics Division, Bhabha Atomic Research Centre, Mumbai - 400085, INDIA
** email: sureshk@barc.gov.in*

In order to study the nuclear reactions induced by beams from medium energy accelerators a compact thin wall multi-purpose scattering chamber (MPSC) has been designed and fabricated. Although the immediate motivation for building the chamber was to setup an experiment to measure the neutron energy spectra in coincidence with alpha particles in the reaction $^{205}Tl(^{7}Li,\alpha)^{208}Pb^{*} \rightarrow n+^{207}Pb^{*}$, the chamber has many features of general purpose scattering chambers (GPSC) [1] and additional features to enable study of nuclear reactions involving measurements of charged particles in coincidence with neutrons and gamma-rays.

The chamber is made of stainless steel and has an internal diameter of 30 cm and height of 27.5 cm. A schematic diagram of the chamber is shown in Fig.1. The wall thickness in the central region is 2 mm to minimize the attenuation of the neutrons or gamma-rays to be detected by the corresponding detector array on the outside of the chamber. The rest of the wall has a thickness of about 4 mm. The top and bottom lids have thicknesses of 10 mm.

To reduce the scattered background counts in the neutron and gamma-ray detector systems the material presence in the surrounding region near the target is minimized. There are therefore only two essential beam entry and exit ports of 4 inch ID standard NEC, a small viewing port at 45 degree, and a KF40 port at 90 degree with respect to the beam direction. The 4 inch entry port has a pair of KF25 ports vertically aligned for an off centre target, vacuum gauges etc., and a horizontal KF40 port for placing anti-scattering shield, targets etc. All the welding is internal and has a smooth finish in order to avoid the trapping of gas molecule in crevices. As the chamber wall thickness is small three vertical reinforcements of cross section 4 mm x 20 mm is provided at appropriate places to bear the atmospheric pressure load.

One side of the chamber is free from any ports or reinforcements to have uniform and least attenuation of neutrons and gamma-rays in the reaction plane in the angular region from 19 degrees to 161 degrees. The other side is also suitable for neutron and gamma-ray detection with smaller detector setup except at 45 degree and 90 degree due to the presence of the above mentioned ports.

There are two rotatable detector arms similar to Pelletron's GPSC[2] with its angle index wheels and Vernier scale to read angular position with a least count of 0.05 degree. For smooth rotation of arms there are two in-built thrust bearings inside the chamber and two ball bearings outside the chamber. The target ladder is mounted from the upper lid which has a provision of vacuum interlock. The monitor detectors mounting arrangements are similar to the FOTIA's GPSC with the additional feature that their angular position can be changed in vacuum.

The rotatable monitor detectors feature is especially provided for using it in the experiment for bringing IN and OUT the absorber/aperture or even a transmission type detector in front of the detectors on the main platforms. Therefore, a separate provision also made to set the fixed angle monitor detectors similar to Pelletron's GPSC using a ring with tapped holes.

At present 15 lemo signal feed-throughs are provided for detectors on main arms through a small chamber at the bottom of chamber connected by a KF25 coupling. For clear visual observation an LED is provided to illuminate it whenever required.

The chamber does not need its own vacuum system. Two 700 l/sec Difstack pumps, one on either side of the chamber, connected to the 7 meter beam line are sufficient to evacuate the entire line to 2 x 10^{-6} mbar within two hours starting from atmosphere.

A photograph of the chamber in the experimental setup at Pelletron Linac Facilty at Mumbai is shown in Fig.2

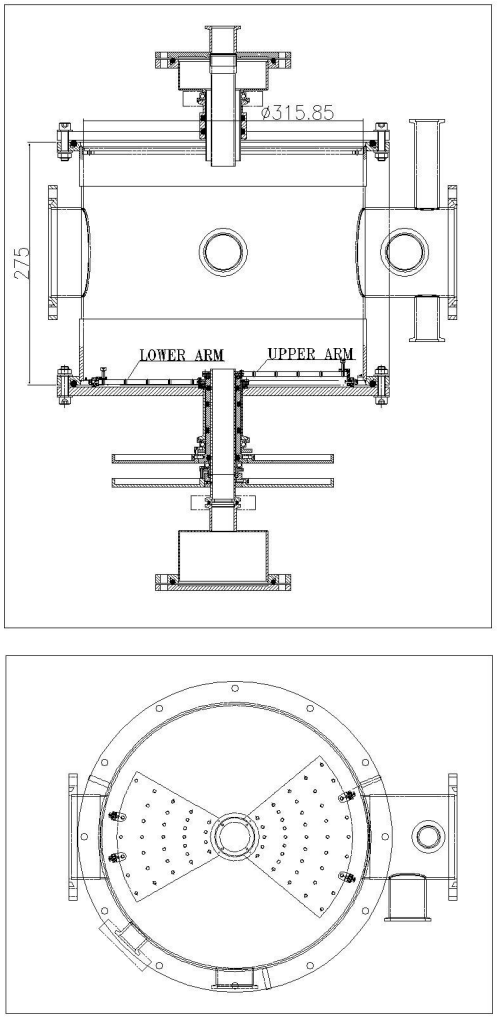

Fig. 1 Front and top views of the MPSC

The authors would like to acknowledge the support extended by Manish Kumar of MDPDS, BARC and the valuable effort of Sunil Kamble for making the auto-cad drawing of the chamber. We would also place on record the sincere effort and keen interest of Surendar S. Patil of Excel Instruments, Mumbai in fabricating the chamber as per our requirements.

Fig. 2 MPSC in an experimental setup

References

[1] Suresh Kumar and S.C. Ojha, National Symp. on Vacuum Sci. & Technology (IVSNS-2003, DAE), Mumbai, (2003) 170

[2] A. Chatterjee, S. Kailas, S.S. Kerekatte, A. Navin, and Suresh Kumar (NPD, BARC), C. Badrinathan and A. Roy (from TIFR), Nucl.Phys.Symp. (DAE), Aligarh, 32B (1989) 62.