Detector system for transfer reaction studies in GPSC

*A. Jhingan[1], Sunil Kalkal[2], P. Sugathan[1], R. Ahuja[1], K. S. Golda[1], J. Gehlot[1], N. Madhavan[1], B. R. Behera[3], S. K. Mandal[2]

[1]*Inter University Accelerator Centre, P. O. Box 10502, New Delhi - 110067, INDIA*
[2]*Deptartment of Physics and Astrophysics, Delhi University, Delhi - 110007, INDIA*
[3]*Deptartment of Physics, Panjab University, Chandigarh- 160014, INDIA*

* *email: akhil@iuac.res.in*

Introduction

The characteristics and performance of the new heavy ion detector system developed for the study of transfer reactions using kinematic coincidences in the General Purpose Scattering Chamber (GPSC) at IUAC are presented. The detector system consists of a pair of two dimensional position sensitive Multi Wire Proportional Counters (MWPC), and a ΔE-E gas ionization chamber.

Description of the detector system

a) MWPC

A schematic of the MWPC is shown in fig.1.

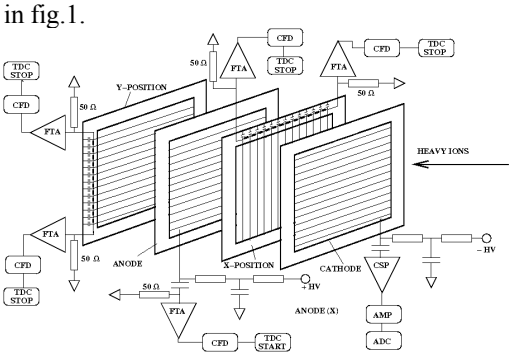

Fig.1: Schematic of MWPC

The core of MWPC consists of four wire frames each with an active area of 5 x 5 cm^2. The wire frames are a cathode, a position wire frame to measure horizontal (X) position, a central anode frame, and a position frame for measuring vertical (Y) position. The distance between adjacent wire frames is 1.6 mm. All wire frames are made from gold plated tungsten wires stretched on a 1.6 mm thick printed circuit board. The separation between adjacent wires is 0.025" (~0.63 mm). For anode the wire diameter is 10 µm whereas it is 20 µm for the remaining electrodes. Position information in both X and Y plane is extracted using commercially available delay line integrated chips (Rhombus Model TZB12-5). Each chip has 10 taps with a delay of 2ns per tap and a characteristic impedance of 50 Ω. In position electrodes, wires are shorted in pair and connected to one tap of delay chip. End to end delay in positions is 80 ns. Entire electrode assembly is mounted inside an aluminum chamber milled from a solid aluminum block. MWPC is isolated from chamber vacuum (low 10^{-6} Torr) using 0.5 micron thick mylar foil at the entrance of the detector. The foil is supported by 0.3 mm thick crossed nylon wires at a pitch of 10 mm to avoid bulging. The position signals were extracted using Ortec VT120B fast amplifier and that of anode from VT120A. All signals were subsequently fed to Ortec CFD to extract the logic signals for time processing. Timing signals from central anode provides master signal for time of flight and position extraction. Cathode is read by charge sensitive preamp followed by shaping amplifier. The detector is operated in isobutane gas with 2 - 4 mbar gas pressure.

b) Ionization chamber

Gas ionization chamber operates in transverse field geometry mode and has a conventional design of three electrodes: cathode, frisch grid and an anode. Anode is segmented into four parts (with lengths 3cm, 6cm, 6cm, 6cm respectively) along the beam direction. Each anode is read independently by a home made charge sensitive preamplifier with a gain of 2 V/pC (Si equivalent) thus providing differential energy loss, total energy and nuclear charge (Z) information of the incoming particle. The active area of IC is 8 x 4.5cm^2 with a depth of 21cm. Frisch grid is fabricated using stretched 20 µm gold plated tungsten wire at 1mm pitch on a standard FR4 printed circuit board with an active area of 23 x 8.2cm. Electrode assembly is mounted inside a hollow SS cylinder chamber. Entrance window is a 0.5 µm mylar. The detector is operated in isobutane gas with a pressure varying from 20 mbar to 100mbar.

Performance

The MWPC was tested off line with ^{241}Am alpha source at 4 mbar isobutane. A bias voltage of +450 V & -200 V were applied on the anode and cathode respectively. At this pressure and voltages the anode signals, after preamplifier, had an amplitude of about 100 – 300 mV with rise times close to 4 ns. For position signals the amplitude varied between 20 – 100 mV with rise times around 5-8 ns. To determine the position resolution, a thin G-10 mask with holes of 0.4 mm diameter arranged in a square array was placed between the source and the detector. The spacing between the adjacent holes is 2 mm. The mask is placed at a distance of 20 cm from the source and 1cm from the first electrode. Fig.1 shows the one dimensional projection of the mask in X-plane. A position resolution of ~0.45mm (fwhm) was obtained.

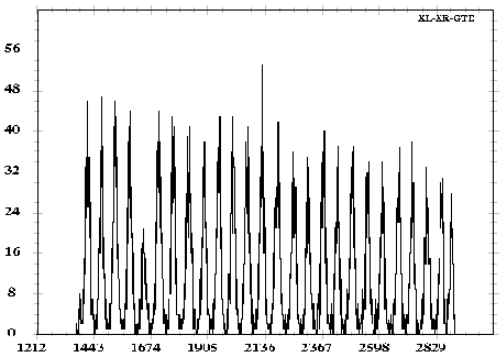

Fig.2: X-projection of the masked spectra

Ionization chamber was also tested off-line with Pu-Am mixed alpha source. An energy resolution of about ~ 110 keV is observed.

The system was used to study the multi-nucleon transfer process for the system ^{28}Si + ^{94,96}Zr at 120 MeV. Fig.3 shows the the experimental setup in GPSC. To avoid transmission loss of weak IC signals, the pre-amplifiers were placed right next to it inside vacuum.

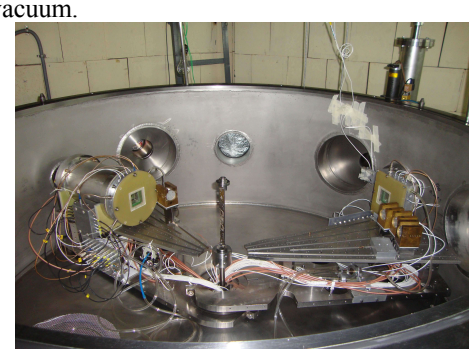

Fig.3: Detector setup inside GPSC

MWPC followed by IC was placed on one of the rotating arms (at a distance of 37 cm from the target) to detect projectile like ions whereas other MWPC was placed on the other arm (60 cm from the target) to detect target like ions. The angular resolutions for MWPC at a distance of 37 cm is better than 0.1 degree. The detectors were placed at kinematic coincident angle to detect both projectile and target like ions simultaneously. A hardware coincidence was generated using CO4010 module. For projectile like ions, singles data was also recorded. The idea of doing so is to extract mass information using angular correlations and kinematics. The arms were rotated during the experiment to extract angular distributions. Difference in TOF signal was recorded by taking start from projectile like MWPC and stop from target like MWPC. MWPCs were operated at 2 mbar isobutane during the experiment. Pulse heights of 400mV-1V were observed . The MWPC could handle a count rate of ~ 100kHz without any breakdown. Fig.4 shows the energy loss in second segment plotted against total energy. Well separated bands can be seen showing clear Z identification. Gas pressures were optimized to have about 60% energy loss (w.r.t. Elastics at given angle) in first two segments. Operating fields were ~ 6 Vcm^{-1} mbar^{-1} for anode - frisch grid region and 2.5 Vcm^{-1} mbar^{-1} for cathode – frisch grid region. At these fields a shaping time of 1μs was found to be optimum for anode signals.

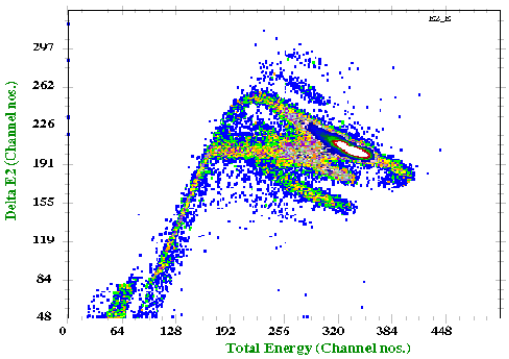

Fig.4: 2D Z identification spectra

We would like to acknowledge support from Vacuum lab, Mechanical workshop and Pelletron group of IUAC during the different stages of the development of this detector system.